QUICK START

RadioShack
www.radioshack.com℠

ENGLISH
43-3570

2.4GHz WDECT Expandable Cordless Telephone
with Caller ID

Refer to your Owner's Manual for complete instructions.

INSTALL THE BATTERY

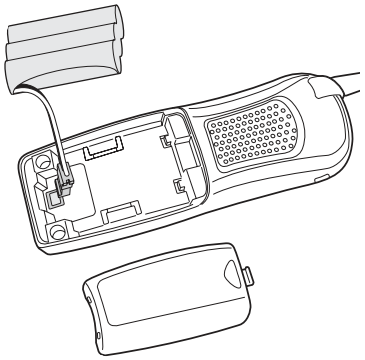

1. Remove the cover from the handset.
2. Connect the battery pack connector with the correct polarity.
3. Replace the cover.

CONNECT TO AC POWER

1. Plug the AC adapter into the **DC IN 9V** jack.
2. Connect the other end of the adapter to a 120V AC outlet

CONNECT TO PHONE LINE

When the handset battery is fully charged, plug the telephone cord into the **TEL LINE** jack. Plug the other end of the cord into a telephone wall jack.

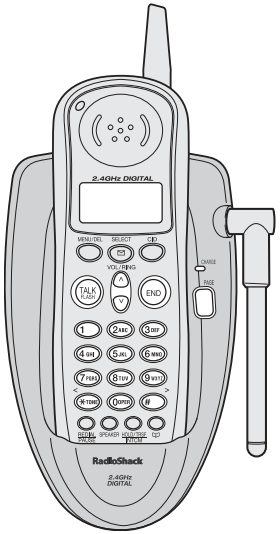

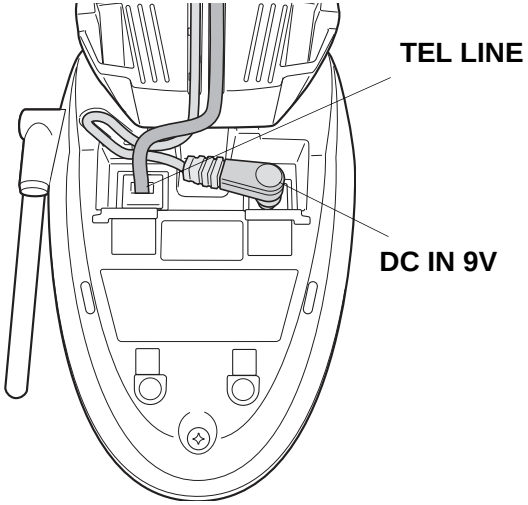

MAKING CALLS

1. Lift the handset and press **TALK/FLASH**, or press **SPEAKER** for a hands-free conversation.
2. Dial the number.
3. To end a call, place the handset on the base or press **END**.

RECEIVING CALLS

1. To answer a call, lift the handset and press **TALK/FLASH**.

   If Auto Talk is on, just lift the handset.

   If the handset is away from the base, press **TALK/FLASH**, or any number key (when Auto Talk is on).

   Or, with the handset in the cradle, press **SPEAKER** for a hands-free conversation.
2. To end a call, place the handset on the base or press **END**.

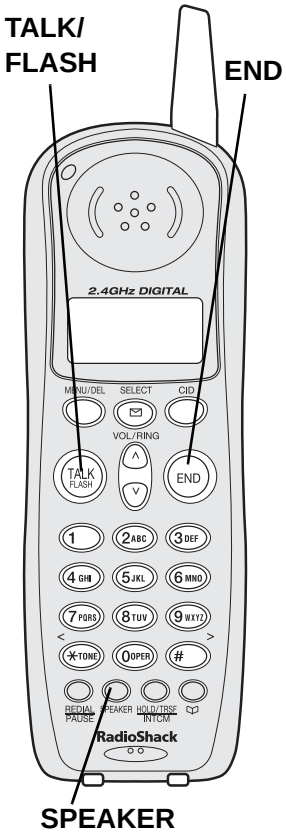

© 2003 RadioShack Corporation. All Rights Reserved.
RadioShack and RadioShack.com are trademarks used by RadioShack Corporation.

12A03
UPZZ69325BZ
Printed in China